APPARATUS FOR MONITORING THE PROPAGATION OF GASES FROM AVALANCHE VICTIMS IN SIMULATED AVALANCHE SNOW AND ITS VALIDATION

Ladislav Bís, Václav Ort, Karel Roubík

Czech Technical University in Prague, Faculty of Biomedical Engineering, Kladno, Czech Republic

Abstract

Complete avalanche burial leads to the progressive development of hypoxia and hypercapnia, the course of which depends, among other factors, on the transport of respiratory gases between the air pocket and the surrounding snow. Previous experimental studies have focused primarily on the physiologic response of buried individuals or on gas concentrations within the air pocket, whereas the temporal evolution of their spatial distribution in the surrounding snow has not been adequately described. The aim of this study was to design, construct, and experimentally validate an apparatus for measuring spatial O_2 and CO_2 concentration profiles in simulated avalanche snow while a participant breathes into a central air pocket. The apparatus consists of a three-dimensional frame, a dual-limb breathing circuit, five radially oriented sampling-needle racks carrying a total of 45 sampling needles, and a pneumatic system for parallel collection and temporary storage of samples. In each measured direction, samples can be collected simultaneously from nine locations spaced at 50-mm intervals. The sample-and-hold system enables subsequent sequential analysis of the samples using a single respiratory gas analyzer. The performance of the apparatus was evaluated in four validation tests conducted with natural snow in a mountain environment. Under the conditions of these tests, neither active sampling from adjacent needles nor sampling from the monitored needle had a detectable effect on the measured O_2 and CO_2 concentrations. No systematic deviation in the concentration profiles attributable to preferential gas transport along the breathing circuit or the sampling needles was observed. Time-dependent changes in sample composition during storage in polymer tubing were experimentally characterized and compensated for using an empirical correction function. The proposed apparatus enables reproducible monitoring of the temporal evolution of the spatial distribution of respiratory gases in simulated avalanche snow.

Keywords

avalanche burial, avalanche snow, air pocket, respiratory gases, hypoxia, hypercapnia, spatial gas distribution, gas sampling, sample-and-hold

Introduction

During complete avalanche burial, the evolution of respiratory gas composition near the airway depends not only on the volume of the available air pocket but also on the ability of the surrounding snow to transport O_2 and CO_2. Experimental studies involving volunteers have shown that separating exhaled CO_2 from the inspiratory region can substantially prolong the period during which respiratory conditions remain favorable [1]. A study of the effects of the physical properties of snow further showed that snow density and structure are associated with the changes in gas concentrations within an artificial air pocket [2]. However, those measurements primarily assessed physiologic responses and gas composition within the air pocket rather than detailed radial concentration profiles in the surrounding snow. In addition, the presence of an air pocket reduces the airflow resistance of the snow medium and thus the work and metabolic cost of breathing [3].

The laboratory spatial measurements reported by Walzel et al. [4] used a cylinder filled with snow or perlite and 13 sampling needles. During diffusion of a mixture containing 16% O_2 and 5% CO_2, spatial concentration differences were determined after 60 min and diffusion coefficients were estimated. For snow, the reported mean values were 13.2 ± 3.7 mm$^2 \cdot$s^{-1} for O_2 and 8.8 ± 1.9 mm$^2 \cdot$s^{-1} for CO_2. Although the experiment quantitatively characterized longitudinal gas transport, it used a defined gas source rather than periodic flow generated by human breathing.

Cramer et al. [5] investigated CO_2 transport in wet avalanche snow. Using a defined CO_2 source and sampling at several distances and depths, they found limited gas transport to the surface of the wet avalanche debris and a spatially heterogeneous concentration distribution. The experimental arrangement was particularly relevant to conditions encountered when searching for buried individuals, but it did not characterize the concurrent spatial propagation of O_2 and CO_2 in the immediate vicinity of a human airway.

Lekar a technika – Clinician and Technology 2026, vol. 56, pp.51–66, DOI: 10.14311/CTJ.2026.56.07
ISSN 0301-5491 (Print), ISSN 2336-5552 (Online)

A direct link between spatial measurements and human breathing was demonstrated by Eisendle et al. [6] in a randomized clinical trial. The authors monitored respiratory variables in volunteers as well as gas concentrations within an air cavity and at distances of 25 and 50 cm. In the control group, changes in concentration at 50 cm were small, whereas active gas routing produced changes even at that distance. These findings demonstrate the importance of adequate temporal and spatial measurement resolution and the limited transferability of results among different snow types, gas sources, and breathing-system configurations.

To capture the instantaneous spatial gas distribution during periodic breathing, time differences among samples collected at individual locations must be minimized. Sequential measurement with a single analyzer can bias comparisons among sampling locations if the concentration field changes during the measurement sequence. Conversely, simultaneous collection of multiple samples requires short-term storage followed by analysis without substantial contamination, mixing, or alteration of composition. It is also necessary to verify that gas withdrawal from the porous medium and the presence of sampling needles do not create undesired preferential transport pathways.

The aim of this study was to design, construct, and experimentally validate a spatial sampling apparatus for experiments in simulated avalanche snow. The apparatus was intended to measure the temporal evolution of the spatial distribution of O_2 and CO_2 relative to a central air pocket into which a participant breathed. Here, a participant refers, for example, to a volunteer taking part in a ventilation experiment. Experimental validation focused on determining whether the apparatus structure, the presence of sampling needles, sample collection and storage, or other system components substantially affected the measured gas concentrations over time and space.

Methods

Design Requirements and Apparatus Concept

The apparatus was designed as a three-dimensional frame that defines the study volume and ensures reproducible positioning of the breathing circuit and gas-sampling locations in simulated avalanche snow. The dimensions of the structure and the relative positions of all measurement components remain unchanged between experiments; only the material simulating avalanche snow is replaced. The frame can be placed within an existing snow layer or surrounded by artificially piled snow. The structure is not a closed snow container. Snow is retained only by the front wall, in front of which the participant is positioned for safety reasons.

The apparatus was designed to meet the following requirements:

(a) For safety reasons, the participant must not be buried in simulated avalanche snow. Nevertheless, the apparatus must reproduce the conditions of breathing into an air pocket in avalanche snow as closely as possible.

(b) The apparatus must permit monitoring of respiratory gas concentrations at several defined distances up to 500 mm from the edge of the central air pocket. This range was based on the studies summarized in the Introduction, particularly study [6].

(c) Samples from the individual distances within a given measurement direction must be collected simultaneously so that they represent the same time point.

(d) The collected samples must be suitable for short-term storage and subsequent sequential analysis using a single analyzer without substantial mixing, contamination, or time-dependent changes in composition; any residual changes must be experimentally characterized and corrected.

(e) The sampling needles, tubing, and sampling procedure must not create substantial preferential gas-transport pathways or otherwise affect the measured concentration field.

(f) The design must provide reproducible geometry of the breathing circuit, air pocket, and sampling locations while allowing the participant to be managed safely outside the snow mass.

The apparatus consists of four principal assemblies: the mechanical structure (frame), the breathing circuit, the sampling-needle rack system, and the system for collecting, storing, and analyzing gas samples.

Mechanical Structure of the Apparatus (Frame)

The complete frame assembly with the breathing circuit and sampling-needle system is shown in Fig. 1; an exploded view of the individual structural components is shown in Fig. 2.

The mechanical structure forms a three-dimensional frame that defines the experimental volume and ensures reproducible positioning of the breathing circuit and sampling locations. As noted above, the frame was not designed as a container for simulated avalanche snow. During an experiment, it is placed within a snow layer or snow is piled around it. Snow inside the apparatus is retained only by the front wall, in front of which the participant is positioned.

The frame comprises a 1115 × 1115-mm base, a 1115 × 1115-mm front wall, two side frames 1100 mm wide and 1115 mm high, and a 1115 × 1115-mm top frame. The overall external dimensions of the assembled frame are 1115 × 1115 × 1145 mm (width × depth × height). A separate rear frame was not used because the rear edges of the side frames together with the top frame adequately define the rear plane of the structure.

Lekar a technika – Clinician and Technology 2026, vol. 56, pp.51–66, DOI: 10.14311/CTJ.2026.56.07
ISSN 0301-5491 (Print), ISSN 2336-5552 (Online)

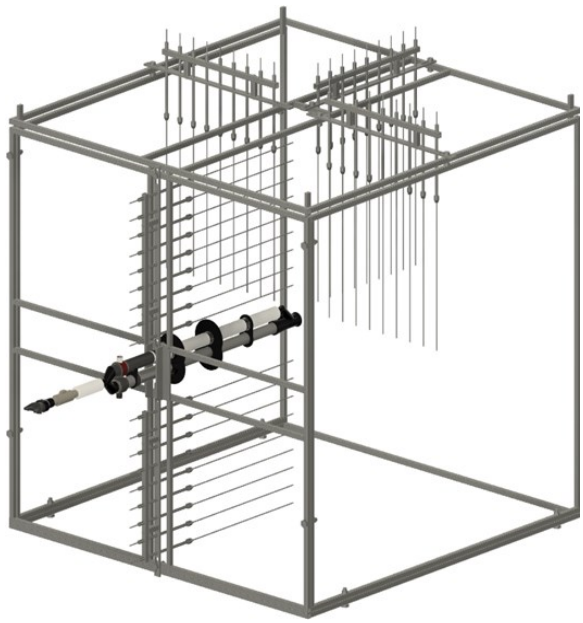

Fig. 1: Complete apparatus assembly comprising the frame, breathing circuit, and five sampling-needle racks. For clarity, the mesh on the front wall is not shown because it would obscure part of the sampling system.

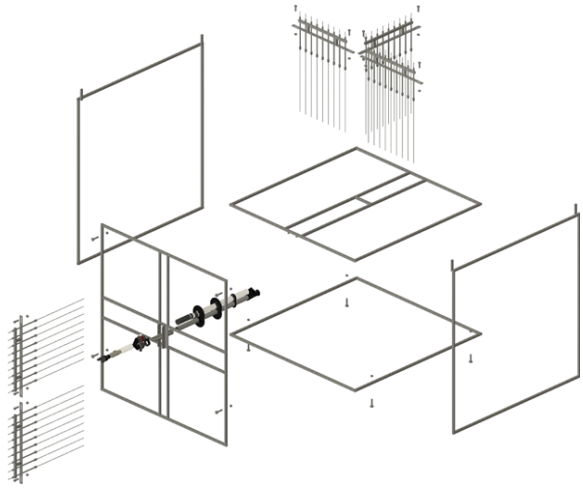

Fig. 2: Exploded view of the mechanical structure of the apparatus: base, front wall, two side frames, and top frame. During an experiment, the front wall is fitted with welded stainless-steel mesh.

The load-bearing components are made of hollow square steel sections with external dimensions of 15 × 15 mm and a wall thickness of 2 mm.

Before an experiment, the front wall and both side frames are attached to the top of the base using 40-mm-long M6 hex-head bolts and corresponding M6 nuts. The side frames are then bolted to the front wall. The top frame is placed onto four guide pins located at the corners of the structure; it is not bolted and is stabilized in its operating position by its own weight.

The front wall is fitted with welded mesh made of AISI 304 (1.4301) austenitic stainless steel. The mesh has 10-mm openings and a wire diameter of 3 mm. It retains the simulated avalanche snow within the defined volume, while the participant remains outside the apparatus for safety.

A port in the center of the front wall supports the dual-limb breathing circuit. The mesh is interrupted above and below this port to allow installation of two sampling-needle racks for sampling upward and downward from the central air pocket.

Breathing Circuit

The breathing circuit conveys exhaled gas from the participant to the central air pocket and draws gas from the pocket during inspiration. The circuit has separate inspiratory and expiratory limbs, thereby minimizing instrumental dead space and limiting bias relative to breathing by an individual actually buried in snow. Unidirectional flow in both limbs is provided by low-resistance one-way valves located distal to the patient Y-piece on the participant side (Ambu P-Valve Housing Complete, ref. 295000501; Ambu A/S, Ballerup, Denmark). Both limbs are made of standard 22-mm-ID corrugated medical tubing. The expiratory limb runs directly along the axis of the air pocket and is housed in a polymethyl methacrylate (PMMA) tube that stiffens the assembly, maintains its defined geometry, and limits cooling of the exhaled gas. This helps preserve the thermal effect of the exhaled gas on the walls of the air pocket and surrounding snow. The inspiratory limb consists of separate corrugated tubing.

Three airtight plastic baffles are fitted around both limbs to prevent gas flow along the tubing and to stabilize the relative positions of the two limbs.

A 200-mm-long section of standard 22-mm corrugated medical tubing, a D-Lite flow and pressure sensor (GE HealthCare, Madison, WI, USA), and a rubber mouthpiece commonly used for diving are connected to the patient Y-piece (Fig. 3).

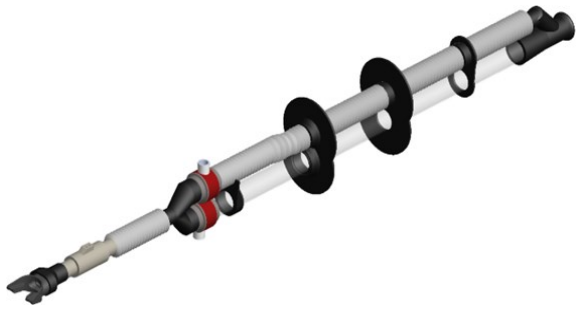

Fig. 3: Dual-limb breathing circuit with a patient Y-piece, low-resistance one-way valves, an expiratory limb housed in a rigid PMMA sleeve, a flexible inspiratory limb, and three sealing and stabilizing baffles.

Lekar a technika – Clinician and Technology 2026, vol. 56, pp.51–66, DOI: 10.14311/CTJ.2026.56.07
ISSN 0301-5491 (Print), ISSN 2336-5552 (Online)

Sampling-Needle Rack System

The front wall and top frame contain openings and mounts for securing five sampling-needle racks. Two racks on the front wall enable gas-concentration measurements upward and downward from the central air pocket. Three racks on the top frame provide measurements posteriorly, that is, distally from the participant, and to the left and right. Because of the presence of the breathing circuit, the apparatus does not permit measurement of the spatial gas-concentration distribution anteriorly toward the participant.

The position of each rack on the frame is adjustable so that the first sampling needle can be placed 50 mm from the edge of the central air pocket. The remaining eight needles are spaced at 50-mm intervals. Thus, each rack contains nine needles, and the complete apparatus provides 45 sampling locations across five racks. Details of the rack design are shown in Fig. 4.



Fig. 4: Sampling-needle rack with nine needles spaced at 50-mm intervals. Guide tubes ensure perpendicular and geometrically reproducible insertion of the needles into the snow.

The sampling needles are made of seamless AISI 304 (1.4301) austenitic stainless-steel tubing with an outside diameter of 3 mm, an inside diameter of 1 mm, and a length of 670 mm. This length includes the distance from the edge of the frame to the axis of the air pocket, the height of the rack above the plane of the frame, and the portion required for handling and connection of the sampling tubing. The insertion depth of each needle is defined by an adjustable stop made of tightly fitting PVC tubing so that the tips of all needles lie on the corresponding axis of the central air pocket. The needles are inserted through guide tubes that ensure perpendicular alignment relative to the frame surface. The guide tubes are made of seamless AISI 304 (1.4301) stainless-steel tubing with an outside diameter of 8 mm, an inside diameter of 5 mm, and a length of 180 mm. They extend 85 mm into the snow from the outer surface of the frame. Plastic end fittings at their inner ends concentrically reduce the exit opening to 3.2 mm, further improving needle guidance.

To prevent the needles from becoming obstructed as they penetrate the snow, their distal ends are sealed with epoxy resin. Two openings 0.8 mm in diameter are drilled perpendicular to the needle axis at distances of 5 and 10 mm from the tip, providing two lateral sampling openings per needle. This lateral arrangement reduces the likelihood that one of the sampling openings will be blocked by snow during needle insertion.

Gas Sampling and Analysis

Nine needles spaced 50 mm apart each other were used in each measurement direction. The proximal end of each needle was connected to the corresponding sampling circuit using polyurethane tubing terminated with a Luer-lock connector.

The apparatus enabled O_2 and CO_2 concentrations to be determined at multiple locations within the snow medium. Because a single analyzer can evaluate gas composition from only one sampling line at a time, a sampling method appropriate to the required temporal and spatial resolution had to be selected.

Three basic approaches were considered for obtaining concentration profiles: (1) simultaneous measurement using several independent analyzers, (2) sequential continuous sampling of individual sampling locations using a single analyzer, and (3) parallel sample collection with temporary storage followed by sequential analysis (sample-and-hold system).

The first approach enables simultaneous measurement at multiple sampling locations using separate analyzers, for example, patient monitors equipped with respiratory gas-analysis modules. However, it requires a corresponding number of instruments and independent sampling lines.

The second approach enables individual sampling locations to be evaluated sequentially using a single analyzer, but the resulting values do not represent the same time point. This arrangement can be implemented by connecting individual sampling locations to multiport valve manifolds with a common outlet. Such a unit can represent one direction when the sampling locations are situated on a single rack. The outlets of these units can then be connected to the inlet of another multiport valve manifold whose outlet is connected to the analyzer. Appropriate switching of the three-way valves thus allows the analyzer to draw a sample from any selected direction and sampling location (needle).

The third approach separates the time of sample collection from the time of analysis. A pneumatic multiplexing system was therefore developed to obtain spatial concentration profiles at identical time points by enabling parallel sample collection, temporary storage, and subsequent sequential evaluation with a single analyzer. This eliminated time differences among samples collected from the individual sampling positions.

Lekar a technika – Clinician and Technology 2026, vol. 56, pp.51–66, DOI: 10.14311/CTJ.2026.56.07
ISSN 0301-5491 (Print), ISSN 2336-5552 (Online)

Three-meter Vital Signs™ sampling tubes (Vyaire Medical Oy, Helsinki, Finland) were used to store the collected samples. The internal volume of each tube was approximately 4 mL, sufficient to unambiguously determine the concentrations of the gas components stored in the tube. Each tube formed an independent storage volume and was connected at both ends to a three-way valve with a Luer-lock connector. Five tubes were arranged in parallel between two five-port Discofix valve manifolds (B. Braun, Melsungen, Germany). Connecting two such assemblies created a module capable of storing 10 independent gas samples.

The sampling side of the module was connected to a sampling needle inserted into the snow, whereas the opposite side was connected to a 10-mL Omnifix syringe (B. Braun, Melsungen, Germany). During sampling, the corresponding pair of three-way valves was opened and 7 mL of gas was drawn into the syringe. This volume exceeded the combined dead volume of the sampling line, including the needle and storage tube. After the corresponding valves were closed, the sample remained isolated in the storage tube until subsequent analysis.

For each radial rack with nine sampling needles, nine modules with a total capacity of 90 storage tubes were used, allowing 10 time-defined samples to be collected from each of the nine needle positions. The tenth storage tube in each module remained unused. At each sampling time point, the corresponding set of valves was opened and nine gas samples were collected simultaneously by moving nine syringes together. The syringe plungers were mechanically linked by a 3D-printed holder that enabled synchronous actuation. The valve manifolds were mounted on two support boards, between which the storage tubes were routed (Fig. 5).

A separate assembly was constructed for each measured spatial direction.

After completion of experimental sampling, the stored samples were introduced sequentially into the respiratory gas analyzer. Their composition was analyzed sequentially, although each set of samples corresponded to a predefined common sampling time point.

A specific feature of the sample-and-hold system was the delay between sample collection and subsequent analysis. During this interval, the collected gas was stored in polymer tubing whose material properties could affect its composition. In the experiments, storage times did not exceed several tens of minutes. Their duration was determined primarily by the rate at which the samples could be analyzed sequentially by a single patient monitor equipped with a gas analyzer. Unlike direct continuous sampling, data processing therefore had to account for changes in concentration occurring during sample storage.

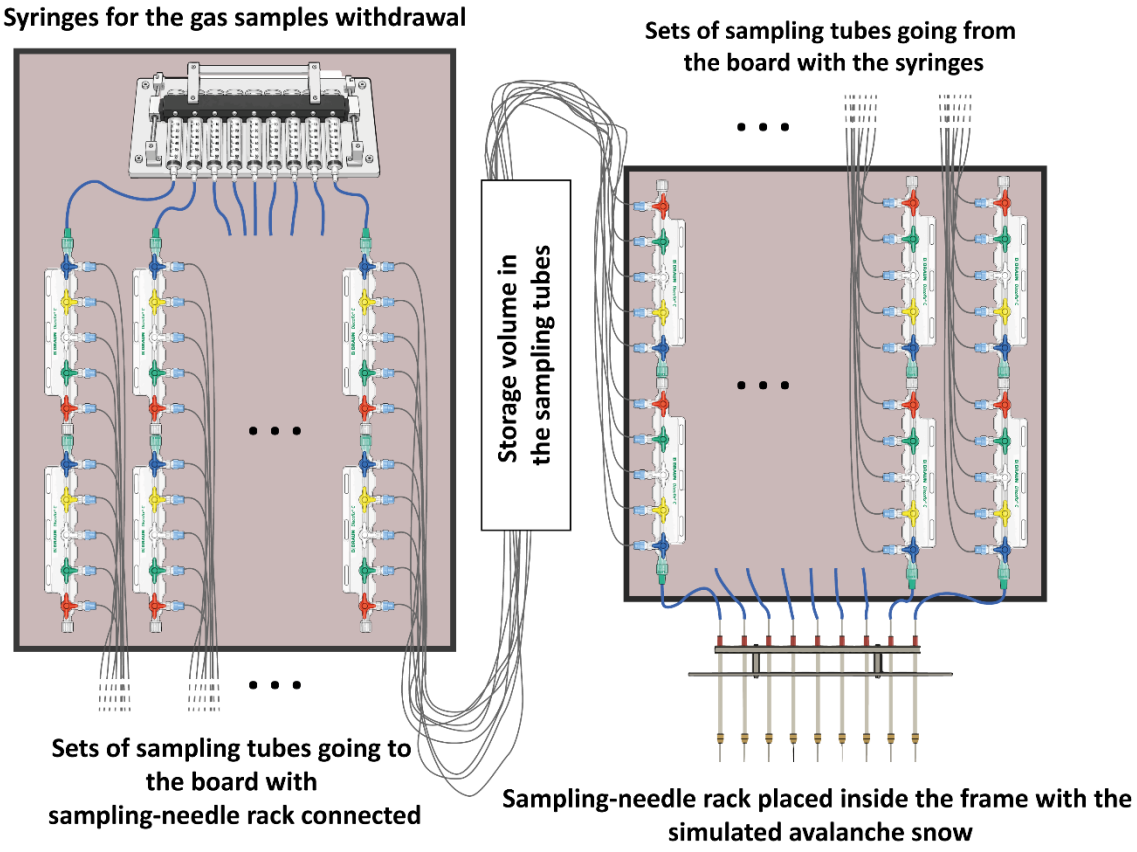

Fig. 5: Pneumatic sampling-module assembly with valve manifolds, storage tubes, and common mechanical actuation of nine syringes.

Lekar a technika – Clinician and Technology 2026, vol. 56, pp.51–66, DOI: 10.14311/CTJ.2026.56.07
ISSN 0301-5491 (Print), ISSN 2336-5552 (Online)

Potential changes in the composition of stored samples were evaluated in advance in a separate series of experiments. These measurements were used to derive an empirical correction function describing the time-dependent change in relative gas concentration during storage in the storage tube:

$$y(t) = a \cdot e^{(b \cdot t)} + c \cdot e^{(d \cdot t)}, \quad (1)$$

where t(min) is the sample storage time from collection to analysis, is a dimensionless correction coefficient, and a, b, c, and d are parameters of the empirical correction function obtained by least-squares fitting. The function incorporated both the time-dependent concentration change during storage and the initial bias introduced when gas was collected into the sample-and-hold system. This initial bias is expressed by $y(0) = 0.9918$; its deviation from 1 is therefore an experimentally determined characteristic of the sampling system rather than an error in normalization of the regression model. To compensate for concentration changes, the measured value for each sample was divided by the correction coefficient calculated for its actual storage time:

$$C_{corr}(t) = \frac{C_{meas}(t)}{y(t)}, \quad (2)$$

where $C_{meas}(t)$ is the concentration determined by the analyzer after storage time t in the tubing and $C_{corr}(t)$ is the concentration corrected for changes arising during sample storage. The correction function was established for the specific sample-and-hold system configuration using Vital Signs™ PVC tubing (Vyaire Medical Oy, Helsinki, Finland). The parameters of Eq. (1) were $a = 0.2033$, $b = -0.02269$ min^{-1}, $c = 0.7885$, and $d = -0.0015$ min^{-1}. These parameters cannot be regarded as generally applicable to other sampling systems. The magnitude of the bias may depend particularly on the tubing material, length, and internal diameter, sample volume, and storage duration. When components or the system configuration are changed, the correction-function parameters must therefore be redetermined experimentally, ideally while controlling additional variables such as ambient temperature and humidity. The correction was applied only to samples stored in the sample-and-hold system; it was not used for direct continuous sampling.

Installation and Practical Use of the Apparatus

Before installing the apparatus, the supporting surface is prepared and leveled. In the experiments reported here, the site was prepared so that at least a 500-mm-thick snow layer remained below the lower plane of the frame. The apparatus can be placed on a prepared snow surface, within a trench cut into an existing snow layer, or using a combination of these approaches. After placement, the frame is progressively filled with simulated avalanche snow. The snow must be free of large hardened or icy chunks that could create marked heterogeneities or preferential pathways for respiratory gas transport. During filling, the snow is therefore mechanically broken up, homogenized, and compacted by trampling.

Filling is interrupted when the snow surface reaches approximately 100 mm below the breathing-circuit port. The breathing circuit is then secured in the port. At this stage, only its straight limb is used, without the patient Y-piece and downstream components. A flexible plastic tube with an outside diameter of 6 mm is passed through the straight limb; an evacuated plastic bag made from NPE (nylon-polyethylene) sleeve material is attached to its end and is used to create the central air pocket. The target pocket volume is 0.5 L. During insertion, the bag is kept collapsed by negative pressure generated with a 1-L large-volume syringe connected through a three-way valve. Once the bag has been fully advanced from the end of the straight limb into the frame, the valve is switched to a compressed-air source equipped with a pressure regulator and pressure gauge. The bag is inflated in a controlled manner while the pressure is monitored continuously to prevent rupture. The filling pressure was determined experimentally in advance so that the inflated bag was sufficiently firm to resist deformation during snow burial without being damaged by excessive inflation pressure. While traction is maintained on the plastic tube, the inflated bag is drawn against the end of the breathing circuit at the center of the frame. Filling with snow is then continued while traction on the tube is maintained. Particular attention is paid to uniform filling around and between both limbs of the breathing circuit to prevent voids or preferential flow pathways. Once the frame is completely filled, the three-way valve is switched back to the evacuated large-volume syringe and the air is withdrawn from the bag. After sufficient collapse, the bag and plastic tube are removed through the straight limb. The assembly used to insert, inflate, deflate, and remove the bag is shown in Fig. 6.

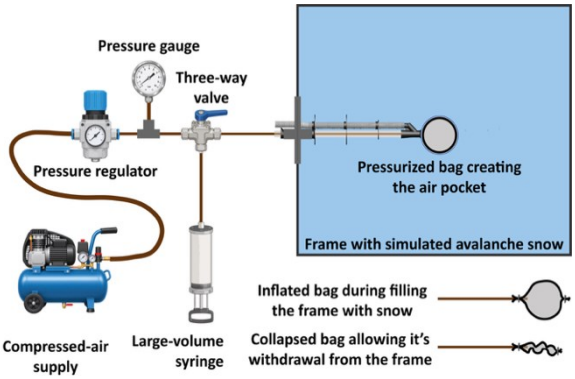

Fig. 6: Assembly used to create the central air pocket: a plastic bag attached to flexible tubing, a large-volume syringe, a three-way valve, and a compressed-air supply with a pressure regulator and pressure gauge. The bag is maintained in a collapsed state by negative pressure

Lekar a technika – Clinician and Technology 2026, vol. 56, pp.51–66, DOI: 10.14311/CTJ.2026.56.07
ISSN 0301-5491 (Print), ISSN 2336-5552 (Online)

during insertion, inflated in a controlled manner after positioning at the center of the frame, and deflated and withdrawn through the breathing circuit after burial in snow.

After the bag was removed, the shape and integrity of the resulting air pocket were inspected using a flexible video endoscope with integrated illumination. If no deformation or collapse of the cavity and no undesired communicating channels in the surrounding snow were observed, the breathing circuit was completed by attaching the patient Y-piece, corrugated tubing, D-Lite flow and pressure sensor, and mouthpiece.

Experimental Validation of the Apparatus

The purpose of the experimental validation was to determine whether the apparatus structure, the presence of sampling needles, active sample collection, or other components of the measurement system substantially affected the measured temporal and spatial distributions of O_2 and CO_2. The experiments were conducted with natural snow in a mountain environment near the Bumbálka chalet in Labská near Špindlerův Mlýn, Krkonoše Mountains, Czech Republic, at an elevation of 740 m. Natural snow depth ranged from 95 to 120 cm. Before the experiments, a snow groomer equipped with a plow was used to create an approximately 10-m^3 mass of compacted snow on a level surface. A heated tent was installed immediately adjacent to the experimental site to house the instruments and maintain their required operating conditions. The temperature was maintained between 15 and 20 °C.

Four validation tests were performed. Two measurement modes using a single respiratory gas analyzer were used: continuous analysis of gas withdrawn from a selected location and parallel sample collection with temporary storage followed by sequential analysis using the sample-and-hold system. Nitrous oxide (N_2O) was used as a tracer gas to create readily identifiable time markers in the concentration record. The markers were generated by briefly opening the N_2O valve manually for approximately 1 s. During subsequent data processing, these markers identified the times of sample collection and individual experimental operations. N_2O was delivered from an unpressurized storage reservoir through a three-way valve located immediately upstream of the analyzer inlet. Thus, the tracer gas entered only the sampling line upstream of the analyzer and was not introduced into the snow model or any part of the apparatus inside the frame.

Tests 1A and 1B: Effect of Active Sampling on Gas Concentrations in the Avalanche-Snow Model

The first two validation tests assessed whether active gas withdrawal through the sampling needles affected locally measured O_2 and CO_2 concentrations in the avalanche-snow model. Test 1A evaluated the effect of sampling from adjacent needles on concentrations measured continuously through one monitored needle. Test 1B evaluated the effect of a single syringe withdrawal directly from the monitored needle on the subsequent concentration record.

As described earlier, test 1A determined whether gas withdrawal through one or more adjacent needles affected concentrations measured continuously through a single monitored needle. This arrangement allowed potential interaction among sampling locations to be assessed as a function of the number and positions of needles used simultaneously. The test was based on the premise that active gas withdrawal could induce flow through the porous snow toward the sampling site and thereby locally alter the spatial O_2 and CO_2 distribution.

Test 1B determined whether a single syringe withdrawal from the same needle used for continuous measurement caused a transient or persistent change in the subsequently recorded concentrations. The test therefore assessed the possible effect of the standard sample-and-hold collection procedure on measured concentration values.

For both tests, a test gas mixture containing approximately 14.5% O_2 and 5.5% CO_2 was prepared; the balance was predominantly N_2. The mixing system comprised a compressor supplying compressed air and cylinders of nitrogen and carbon dioxide. The flow of each component was adjusted with a separate throttle valve and verified using a flowmeter so that the final mixture reached the specified composition at the required total flow rate. The mixture was delivered through a common outlet line into the central air pocket formed in compacted snow inside the frame.

O_2 and CO_2 concentrations in the test mixture were measured using a Datex-Ohmeda S/5 patient monitor equipped with a Datex-Ohmeda S/5 Compact Airway Module E-CAiOVX respiratory gas-analysis module (GE HealthCare, Madison, WI, USA). This side-stream module continuously aspirates analyzed gas at a manufacturer-specified flow rate of 200 ± 20 $mL \cdot min^{-1}$ [7]. The same monitor and module were subsequently used for continuous measurements and for analysis of samples collected during the remaining validation experiments.

The target volume of test mixture delivered to the air pocket was 90 L. This volume was selected to create an approximately spherically symmetric region of altered gas composition in the snow at the center of the frame, with a radius greater than the distance from the central air pocket to the middle, fifth needle. The estimate assumed a snow porosity corresponding to a density of 250 $kg \cdot m^{-3}$. After the target volume had been delivered, the breathing-circuit inlet was closed to prevent ambient air from washing the test mixture out of the central air pocket and surrounding snow.

Test 1A: Effect of Sampling From Adjacent Needles

Test 1A was performed on the rack oriented distally from the participant. The rack contained the standard

Lekar a technika – Clinician and Technology 2026, vol. 56, pp.51–66, DOI: 10.14311/CTJ.2026.56.07
ISSN 0301-5491 (Print), ISSN 2336-5552 (Online)

nine sampling needles. O_2 and CO_2 concentrations were measured continuously through the middle, fifth needle, while samples were collected sequentially from the adjacent needles.

Sampling was performed in five configurations: from needle 4 only; simultaneously from needles 1–4; from needle 6 only; simultaneously from needles 6–9; and simultaneously from all eight surrounding needles, that is, all needles except the continuously monitored needle 5. At each sampling event, 7 mL of gas was withdrawn through each selected needle.

The configurations were performed in the stated order at approximately 5-min intervals. The continuous O_2 and CO_2 record was then evaluated for transient or persistent changes temporally associated with sampling from the adjacent needles. The experimental arrangement for test 1A is shown in Fig. 7.

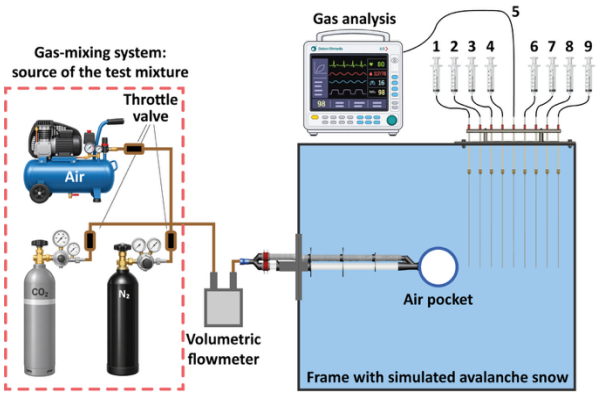

Fig. 7: Experimental arrangement for test 1A, used to assess the effect of gas withdrawal from adjacent needles on continuously measured concentrations. O_2 and CO_2 concentrations were measured continuously through needle 5, while samples were withdrawn from adjacent needles in five defined combinations.

Test 1B: Effect of Sampling From the Monitored Needle

In test 1B, the analyzer sampling line and a syringe used for standard experimental sample collection were connected to the monitored needle through a three-way valve. All other sampling needles were closed with plugs.

Before delivery of the test mixture to the central air pocket, continuous O_2 and CO_2 measurement through the monitored needle was initiated. At regular 60-s intervals, the three-way valve was switched to the sampling position and a 7-mL gas sample was withdrawn from the same needle using the syringe. After collection, the valve was switched back and the analyzer resumed continuous withdrawal from the monitored needle. The procedure was repeated periodically for 6 min.

The concentration record was evaluated for transient or persistent changes temporally corresponding to individual syringe withdrawals. Brief switching of the three-way valve did not produce a condition interpreted by the monitor as a blocked sampling line (sample line blocked). The experimental arrangement for test 1B is shown in Fig. 8.

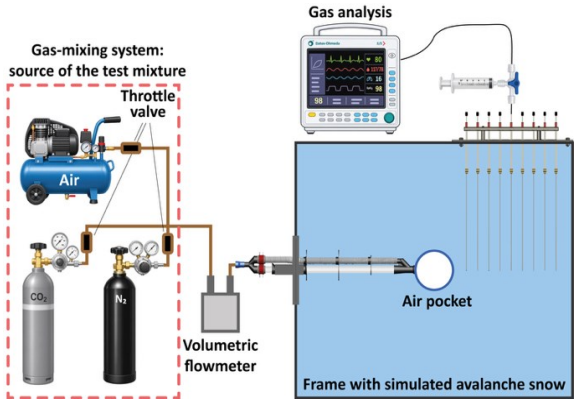

Fig. 8: Experimental arrangement for test 1B, used to assess the effect of a single gas withdrawal from the monitored needle. The needle was alternately connected to the respiratory gas analyzer and the sampling syringe through a three-way valve. The remaining needles were closed.

Tests 2A and 2B: Effects of Apparatus Components on the Spatial Gas-Concentration Distribution in the Avalanche-Snow Model

Tests 2A and 2B assessed whether structural components of the apparatus affected the spatial distribution of O_2 and CO_2 in the avalanche-snow model. Two potential sources of interference were evaluated. Test 2A examined whether the breathing circuit created a preferential gas-transport pathway along its limbs, allowing increased gas transport from the central air pocket toward the surface of the snow mass. Test 2B evaluated whether prolonged presence of the sampling needles in the snow created preferential transport pathways and thereby affected the measured concentration profiles.

Both tests were performed simultaneously within a single experiment and differed only in the method used to evaluate the data. Measurements included five sampling directions defined relative to the center of the central air pocket: P, posteriorly, that is, distally from the expected participant position; R, right; D, downward; L, left; and C, proximally toward the participant position. In directions P, R, D, and L, samples were collected through sampling needles inserted into the snow. In direction C, sampling locations were created on the outer surface of a modified breathing circuit, with distances from the center of the central air pocket corresponding to those of the sampling-needle tips in the other directions.

A total of 90 L of test mixture containing approximately 14.5% O_2 and 5.5% CO_2 was delivered to the central air pocket over slightly less than 8 min. The same gas-mixing system used in tests 1A and 1B was used. During delivery, samples were collected in

Lekar a technika – Clinician and Technology 2026, vol. 56, pp.51–66, DOI: 10.14311/CTJ.2026.56.07
ISSN 0301-5491 (Print), ISSN 2336-5552 (Online)

directions P, R, D, and C at 2, 4, and 6 min after the start of filling. The needles in direction L were inserted into the snow only at 8 min, after the full target volume had been delivered. From that time onward, all directions were included. Additional samples were collected at 8, 10, 14, 22, 38, 70, and 118 min after the start of filling.

Test 2A: Effect of the Breathing Circuit

Test 2A determined whether the breathing circuit and its structural components locally affected the spatial O_2 and CO_2 distribution. Specifically, the test examined whether a preferential transport pathway developed along the inspiratory and expiratory limbs, allowing increased gas transport from the central air pocket toward the surface of the snow mass. For this purpose, concentration profiles measured in direction C were compared with profiles obtained in the other directions.

A specially modified breathing circuit was constructed solely for test 2A. Nine sampling openings were created in its inspiratory limb, and the ends of sampling tubes were positioned in these openings. Their distances from the center of the central air pocket corresponded to the positions of sampling-needle tips in the other directions. The tubes were routed through the inspiratory limb and led outside the frame, where they could be connected to the sampling system. The proximal end of the inspiratory limb was closed with a plug that also sealed the space between the individual tubes.

The test mixture was delivered to the central air pocket through the expiratory limb. After the target volume had been delivered, this limb was also closed. Except for the sampling openings, internal sampling tubes, and closure of both limbs, the modified circuit matched the circuit used in participant experiments in dimensions, structural components, and materials.

Concentration profiles in direction C were compared with those in directions P, R, and D and, from 8 min onward, with the profile in direction L. Systematically higher CO_2 concentrations or lower O_2 concentrations in direction C could indicate preferential transport of the test mixture along the breathing circuit.

Test 2B: Effect of the Presence of Sampling Needles

Test 2B evaluated whether prolonged presence of the sampling needles in the snow affected local O_2 and CO_2 concentrations. Needles in directions P, R, and D were present in the snow during delivery of the test mixture, whereas needles in direction L were inserted only at 8 min, after the complete target volume had been delivered.

Delayed insertion of the direction-L needles allowed the concentration profile obtained with needles that had been present in the snow only briefly to be compared with profiles in directions where needles had been inserted before delivery of the test mixture began. Differences among these profiles could indicate whether long-term needle placement created preferential transport pathways along the needle surfaces.

Evaluation of tests 2A and 2B was based on comparisons of O_2 and CO_2 concentration profiles as functions of distance from the central air pocket and time. Profiles were compared for samples collected at 2, 4, 6, 8, 10, 14, 22, 38, 70, and 118 min after the start of test-mixture delivery. For test 2A, particular attention was given to deviations of the direction-C profile from profiles in the other directions. For test 2B, the direction-L profile was compared primarily with the direction-R profile and secondarily with profiles in directions P and D.

Results

Based on the specified design and functional requirements, an apparatus was constructed and assembled that provided reproducible positioning of the breathing circuit, central air pocket, and sampling locations in simulated avalanche snow. Practical installation confirmed that the system could be used for simultaneous sampling at defined distances and for the planned validation experiments under actual mountain conditions. Photographs of the assembled frame, creation of the air pocket, and the complete apparatus during practical implementation and testing are shown in Fig. 9.

The results of the technical validation are presented in two parts. The first evaluates possible effects of active gas sampling on measured O_2 and CO_2 concentrations, both during sampling from adjacent needles (test 1A) and during sampling directly from the monitored needle (test 1B). The second evaluates the effects of the breathing circuit (test 2A) and sampling needles (test 2B) on the spatial CO_2 concentration distribution.

Lekar a technika – Clinician and Technology 2026, vol. 56, pp.51–66, DOI: 10.14311/CTJ.2026.56.07
ISSN 0301-5491 (Print), ISSN 2336-5552 (Online)



Fig. 9: Photographs of the practical implementation of the apparatus for measuring the temporal evolution of the spatial distribution of O_2 and CO_2 during ventilation experiments in simulated avalanche snow. A, assembled apparatus frame with the breathing circuit; B, breathing circuit with an inflated bag used to create the air pocket while the apparatus was filled with snow; C, complete apparatus embedded in snow, with sampling needles connected to the system for parallel sample collection, temporary storage, and subsequent sequential analysis.

Lekar a technika – Clinician and Technology 2026, vol. 56, pp.51–66, DOI: 10.14311/CTJ.2026.56.07
ISSN 0301-5491 (Print), ISSN 2336-5552 (Online)

Effect of Active Sampling on Gas Concentrations in the Avalanche-Snow Model

Test 1A: Effect of Sampling From Adjacent Needles

No clear step changes in O_2 or CO_2 concentrations were observed after gas was withdrawn from adjacent needles in any of the five configurations while continuous sampling through needle 5 was maintained. Figure 10 shows the result for continuous gas withdrawal through needle 5 in the posterior direction, that is, distally from the expected participant position. The experiment comprised two phases: filling the air pocket and sampling from the needles according to the protocol described in Methods. The test-mixture concentrations achieved were 14.65% O_2 and 5.45% CO_2. During 8 min 5 s of delivery, 90 L of test mixture was introduced into the air pocket, corresponding to a mean volumetric flow rate of approximately 11.2 $L \cdot min^{-1}$.

During the experiment, automatic zeroing of the gas analyzer occurred between the fourth and fifth sampling configurations and produced a transient decrease in measured O_2 and O_2 concentrations toward zero. After zeroing, the signals stabilized at levels different from those before zeroing. The Datex-Ohmeda S/5 monitor performs this procedure automatically, independently of the user, and it cannot be delayed or disabled by the user. Changes associated with zeroing were larger than those observed during individual sampling events from the adjacent needles. This observation demonstrates a substantial effect of the analyzer itself on the recorded concentration traces, whereas the effect of sampling was negligible by direct comparison. In contrast to the effect of automatic zeroing, no effect of sample withdrawal on the concentration traces was observed; sampling from adjacent needles in any of the tested configurations did not affect the gas concentrations measured at the selected monitoring position.

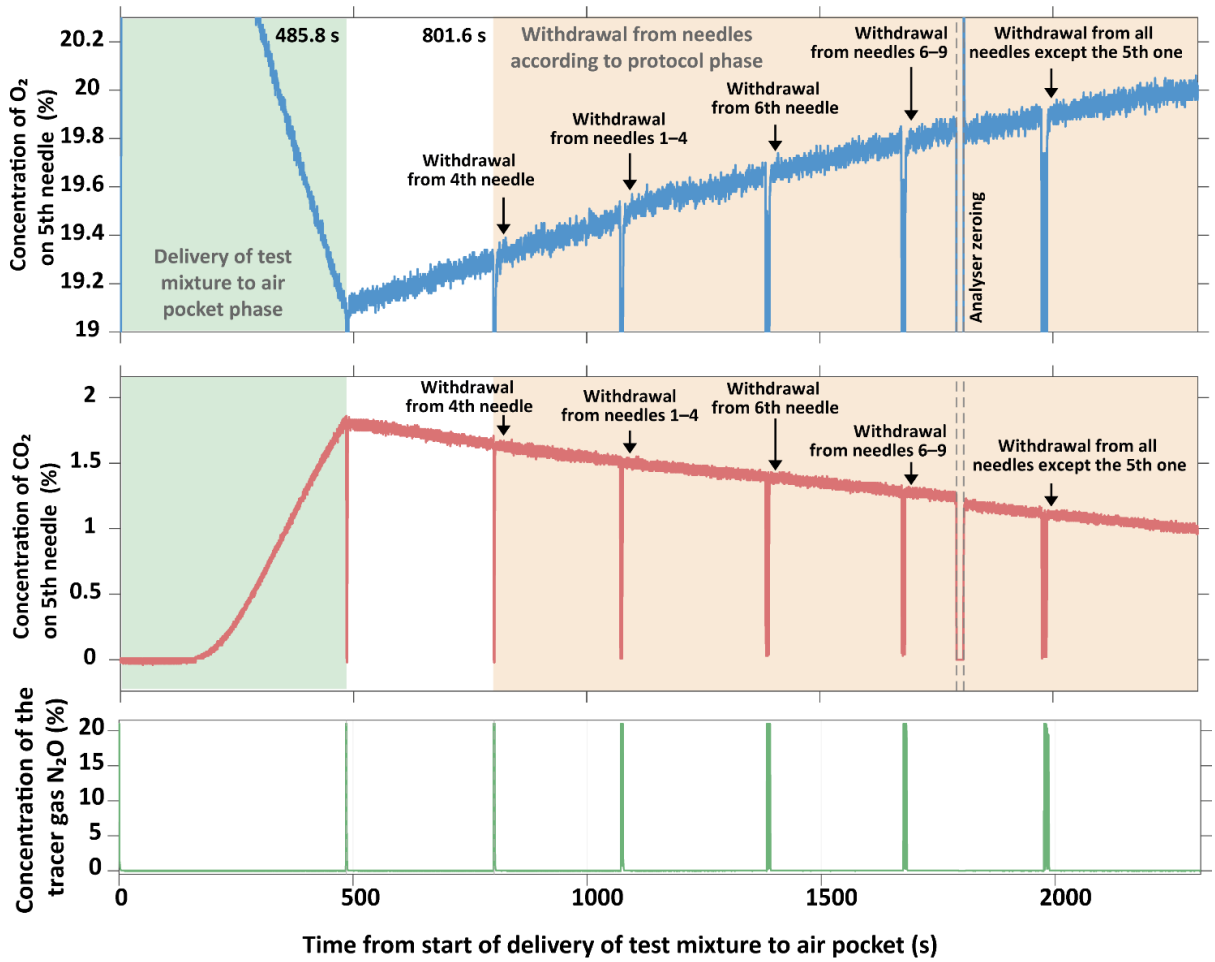

Fig. 10: Time courses of O_2, CO_2, and N_2O concentrations during continuous monitoring through sampling needle 5 in the direction distal to the expected participant position. The record includes filling of the air pocket with the test gas mixture and subsequent sampling from adjacent needles in five configurations. Red markers identify the sampling events; the gray interval indicates gas-analyzer zeroing, as described in the text.

Lekar a technika – Clinician and Technology 2026, vol. 56, pp.51–66, DOI: 10.14311/CTJ.2026.56.07
ISSN 0301-5491 (Print), ISSN 2336-5552 (Online)

Test 1B: Effect of Sampling Directly From the Monitored Needle

Repeated syringe withdrawals from the same needle through a three-way valve produced no clear O_2 or CO_2 concentration excursion in the continuous record. The concentration traces continued along their temporal trends without observable disruption. The test mixture contained 14.65% O_2 and 5.45% CO_2. During 5 min 37 s of delivery, 90 L of test mixture was delivered into the air pocket, corresponding to a mean volumetric flow rate of approximately 16 $L \cdot min^{-1}$.

The results are shown in Fig. 11 for sampling from the rack oriented to the right; the other results are consistent with the presented right direction. Each experiment comprised several phases. In the first phase, both gas concentrations were measured at the outlet of the gas mixer. In the second phase, the measured mixture was delivered to the air pocket. In the third phase, samples were collected from the needles according to the protocol described in Methods. No sampling event produced an observable effect on O_2 or CO_2 concentrations. Thus, even repeated withdrawal of the defined sample volume from the same needle did not alter the concentration traces or affect measurements obtained with the apparatus and its sampling system.

No sampling event produced an observable effect on O_2 or CO_2 concentrations. Thus, repeated withdrawal of the defined gas volume required for analysis from the same needle did not alter the concentration traces or affect results obtained with the apparatus and its sampling system.

Test 2A and 2B: Effect of the breathing circuit and sampling needles on Gas Concentrations in the Avalanche-Snow Model

The test mixture contained 14.65% O_2 and 5.45% CO_2. During 5 min 37 s of delivery, 90 L of test mixture was introduced into the air pocket, corresponding to a mean volumetric flow rate of approximately 16 $L \cdot min^{-1}$. The dataset for the second test contained 351 numeric CO_2 concentration values across spatial locations and time points. Figure 12 presents CO_2 concentration profiles in all measured directions at three selected times (8, 22, and 38 min).

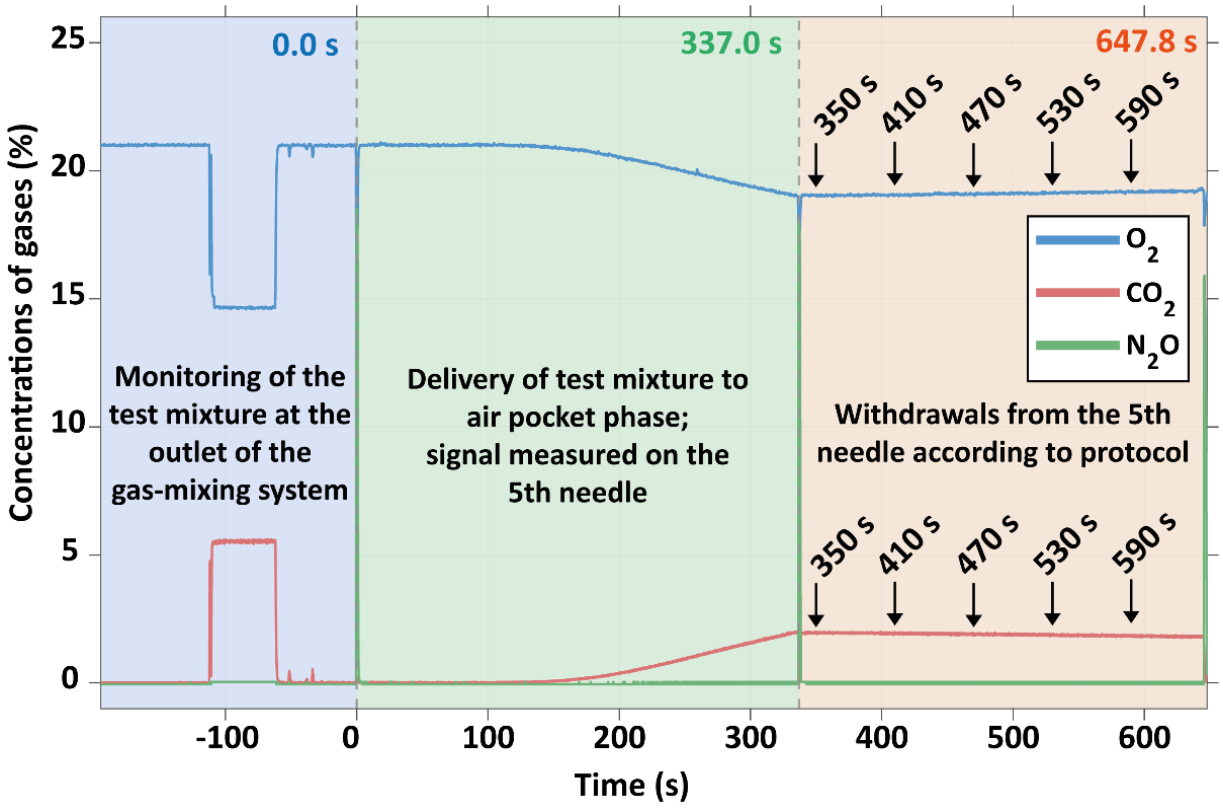

Fig. 11: Time courses of O_2, CO_2, and N_2O concentrations during repeated syringe withdrawals through a three-way valve in the direction to the right of the air pocket. The record is divided into measurement of the mixture at the gas-mixer outlet (blue region), delivery of test gas to the air pocket (green region), and subsequent gas withdrawals according to the protocol (orange region). Red markers indicate individual sampling times.

Lekar a technika – Clinician and Technology 2026, vol. 56, pp.51–66, DOI: 10.14311/CTJ.2026.56.07
ISSN 0301-5491 (Print), ISSN 2336-5552 (Online)

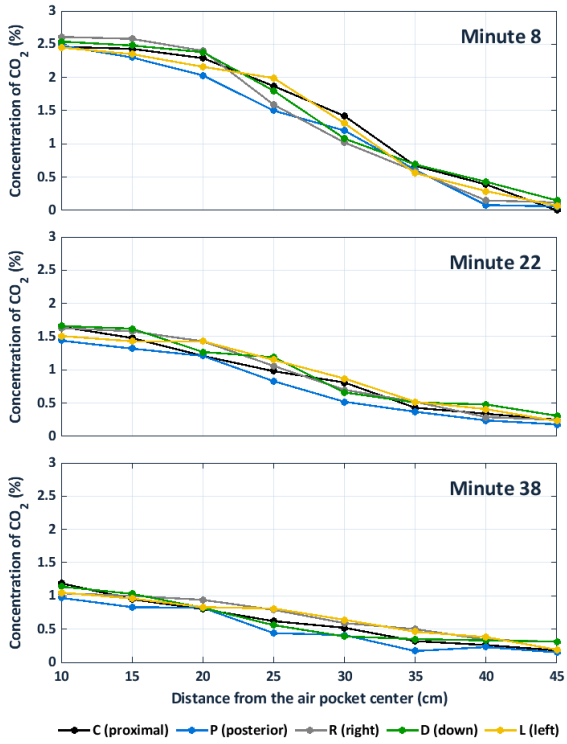

Fig. 12: Comparison of CO_2 concentration profiles at 8, 22, and 38 min in all measured directions.

At all evaluated times (2, 4, 6, 8, 10, 14, 22, 38, 70, and 118 min), no deviation was observed in direction C, that is, along the breathing circuit toward the expected participant position, relative to the other directions. Although the signals exhibited random fluctuations in each measurement, no systematic deviation was identified. The proposed breathing circuit with sealing baffles therefore provided an adequate barrier to gas flow from the central air pocket. No preferential gas flow along the breathing circuit that could be interpreted as leakage was detected. Despite the more complex and spatially extensive configuration of the breathing circuit, no disruption of the approximately spherical propagation and diffusion of gas within the apparatus filled with simulated avalanche snow was observed.

Equivalent conclusions were obtained when concentration profiles in direction L were compared with those in the other directions. No profile differences were observed at any sampling time, although the direction-L needles were inserted only after the entire volume of test gas had been delivered to the air pocket. Thus, under the conditions tested, the presence of needles in the snow did not produce a substantial change or preferential gas flow in any direction, and use of the apparatus did not measurably bias the gas-concentration profiles during breathing experiments.

Discussion

The principal outcome of this study is the design, construction, and technical validation of an apparatus for monitoring the temporal evolution of the spatial distribution of O_2 and CO_2 around a central air pocket in simulated avalanche snow. The apparatus provides reproducible geometry of the breathing circuit, air pocket, and sampling locations while allowing experiments to be performed with the participant positioned outside the snow mass. Practical installation in a mountain environment confirmed that the structure can be assembled, filled with compacted natural snow, and used for parallel sampling at defined distances.

An important feature of the apparatus is its ability to obtain concentration profiles in several directions while maintaining a common sampling time at all nine distances within each profile. Previous studies demonstrated the importance of the air pocket, snow properties, and respiratory gas transport for the survival of buried individuals [1–3, 6], but generally monitored physiologic responses, concentrations within the air pocket, or gas transport at a limited number of positions. The present apparatus complements these approaches by enabling more detailed characterization of the time-varying spatial concentration field generated by periodic human breathing.

Technical validation focused on possible disturbance of the measured concentration field by the apparatus itself. In test 1A, sampling from adjacent needles produced no clear changes in O_2 or CO_2 concentrations at the location continuously monitored through needle 5. Similarly, test 1B showed no changes in the continuous record that could be unequivocally linked in time to repeated syringe withdrawals from the same needle. Under the conditions tested, active withdrawal of the specified sample volume therefore produced no detectable change in local concentrations, and no substantial interaction among neighboring sampling locations was demonstrated. This conclusion is limited to the needle geometry, sample volume, analyzer flow rate, snow properties, and experimental time course used in this study.

In contrast, test 1A revealed a clear effect of automatic analyzer zeroing. After zeroing, the O_2 and CO_2 signals stabilized at levels different from those before the zeroing, and the magnitude of this change exceeded any changes associated with sampling from adjacent needles. This finding indicates that, during prolonged continuous measurement, the internal operating cycle of the analyzer may be an important source of uncertainty in addition to the sampling system. Automatic zeroing must therefore be identified in the measurement record, and affected intervals should be evaluated separately. Future experiments

Lekar a technika – Clinician and Technology 2026, vol. 56, pp.51–66, DOI: 10.14311/CTJ.2026.56.07
ISSN 0301-5491 (Print), ISSN 2336-5552 (Online)

should also determine whether the post-zeroing baseline shift depends on operating time, ambient temperature, or current gas composition.

Tests 2A and 2B showed no systematic deviation in the concentration profile along the breathing circuit or in directions containing sampling needles. Under the experimental conditions, no measurable preferential gas transport was detected along the surface of the breathing circuit or along the sampling needles. These findings support the effectiveness of the sealing baffles on the breathing circuit and the design of the needle guide tubes. They also suggest that these components did not alter the concentration profiles beyond the variability observed among measured directions.

These results do not, however, demonstrate complete spherical symmetry of gas transport. Spatial differences may also arise from natural snow heterogeneity, local differences in compaction, gravity, temperature gradients, or unequal geometry among individual directions. It is therefore more accurate to state that no systematic deviation attributable to the breathing circuit or to differences in the duration of needle placement was identified in the measured profiles. Demonstration of spatial symmetry would require repeated experiments and quantitative comparison of the profiles using predefined metrics.

A mesh with 10 × 10-mm openings was selected for the front wall of the frame. The relatively large openings limit the fraction of the cross-sectional area occupied by wire and thereby reduce the risk that the mesh will substantially affect diffusive or convective gas transport between the snow inside the frame and the surrounding environment. At the same time, the mesh mechanically retains the snow and allows the participant to be positioned safely in front of the apparatus. The effect of the mesh on gas transport was not evaluated in a separate experiment. Any assertion that its resistance is negligible should therefore be understood as a design assumption based on the high open-area fraction rather than a directly demonstrated result.

Reproducible formation of the central air pocket is important for comparability among experiments. The flexible bag permits creation of a pocket with a predefined volume of approximately 0.5 L and can be removed through the breathing circuit after burial without disturbing the surrounding snow. Connection to a regulated pressure source helps maintain the bag shape during burial and may compensate for minor leakage. A disadvantage of forming the pocket with a pressurized bag is that the resulting geometry depends on bag compliance, inflation pressure, and the mechanical resistance of the surrounding snow. For comparisons among experiments, bag material and dimensions, inflation pressure, inflation duration, and video-endoscopic inspection of final pocket shape should therefore be standardized.

The sample-and-hold system separates sample collection from analysis and thus permits a spatial profile corresponding to a single time point to be obtained with one analyzer. This reduces the number of analyzers required and enables field measurement at a large number of sampling locations. Its disadvantage is alteration of sample composition during storage. Storage elements made from materials with low gas permeability and sorption, such as glass or stainless steel, would provide greater sample stability. However, implementing such a system for tens to hundreds of samples would be structurally more complex, heavier, less resistant to handling, and more difficult to use under field conditions. Flexible PVC tubing therefore represented a practical compromise among sample stability, system capacity, weight, and ease of operation. Time-dependent changes in sample composition in the PVC tubing were characterized with an empirical correction function. The correction reduces systematic bias associated with storage duration but cannot be considered universal. Its validity is limited to the specific tubing material, length, and internal volume, sample volume, concentration range, and conditions under which it was derived. If the system configuration or experimental conditions are changed, the correction function must be redetermined.

A practical limitation of field use is the risk of freezing or obstruction of the sampling openings by snow. The sealed needle tip and lateral sampling openings reduce this risk but cannot eliminate it. Reliable use therefore requires standardized handling, verification of patency of each sampling line, and minimization of water condensation in the tubing.

Nitrous oxide proved useful as a tracer gas because the respiratory gas-analysis module provided its concentration as a separate output signal. Brief N_2O pulses inserted markers for experimental operations into the continuous record that could not always be identified reliably from the O_2 and CO_2 traces alone. This was particularly important when a collected sample had a composition similar to that of the surrounding gas and therefore did not produce a recognizable change in the analyzed concentrations. Pulse sequences can also encode the type of event or sampling direction using a simple predefined code, for example Morse code.

This study has several limitations. Technical validation was performed at a single field site and over a limited range of snow properties. Gas transport depends on snow density, grain size and morphology, liquid water content, temperature, stratification, and compaction method. The results therefore cannot be generalized without qualification to all types of avalanche snow. In addition, the individual validation protocols were designed primarily to detect clear systematic artifacts. The absence of a visually apparent change in a concentration record does not demonstrate a zero effect; it indicates only that any effect did not exceed the resolution of the method used. Future validation should include replication, predefined tolerance limits, estimation of measurement

Lekar a technika – Clinician and Technology 2026, vol. 56, pp.51–66, DOI: 10.14311/CTJ.2026.56.07
ISSN 0301-5491 (Print), ISSN 2336-5552 (Online)

uncertainty, and quantitative statistical comparison of concentration profiles. Another limitation is that a single analyzer was used for sequential sample evaluation. Although the sample-and-hold system preserves a common sampling time, results are affected by storage duration, analyzer stability, and automated operating cycles. Validation of the breathing-circuit effect was based on sampling locations created on the inspiratory limb and therefore provides direct information primarily about transport in its vicinity. The effect of the second limb and individual structural transitions was assessed only indirectly. In addition, reproducibility of the air-pocket geometry was checked by video endoscopy rather than by accurate three-dimensional imaging.

Despite these limitations, the apparatus provides a platform for systematic investigation of respiratory gas transport in simulated avalanche snow. It can be used to examine the effects of the physical properties of snow, the size and geometry of the air pocket, tidal volume, minute ventilation, the inspiratory-to-expiratory time ratio, and breathing-interface design. The apparatus may also support development and comparison of protective devices for avalanche burial, validation of numerical models of O_2 and CO_2 transport in porous snow, and assessment of conditions under which regions of oxygen depletion or elevated CO_2 concentration form around the airway.

Conclusion

In this study, an apparatus was designed, constructed, and experimentally validated for monitoring the temporal evolution of the spatial distribution of O_2 and CO_2 around a central air pocket in simulated avalanche snow. The design provides reproducible positioning of the breathing circuit, air pocket, and sampling locations in five directions and allows simultaneous sample collection at nine defined distances in each direction. The sample-and-hold system allows the samples collected in parallel to be stored and subsequently analyzed sequentially using a single respiratory gas analyzer.

Under the conditions of this study, the validation experiments showed no detectable effect of active sampling from adjacent needles or directly from the monitored needle on measured O_2 and CO_2 concentrations. No systematic deviation in the concentration profiles attributable to preferential gas transport along the breathing circuit or sampling needles was identified. Under the characterized conditions, changes in sample composition during storage in polymer tubing could be partially compensated for using an empirical correction based on the actual storage duration.

The apparatus met the specified design and functional requirements, and its practical usability was demonstrated in an actual mountain snow environment. It therefore provides a suitable experimental platform for studying respiratory gas transport in simulated avalanche snow, comparing the effects of different snow properties and ventilatory conditions, and evaluating devices intended to improve the likelihood of survival during complete avalanche burial. The conclusions of the technical validation are limited to the apparatus configuration, sampling protocol, and snow conditions used in this study.

Supplementary materials

Many details related to the construction, usage and testing of the apparatus are presented as supplementary material at https://ventilation.fbmi.cvut.cz/data/.

Acknowledgement

The authors thank Ladislav Sieger, MSc, PhD, and Karel Sýkora, MSc, PhD, for their contributions to the design and construction of the apparatus, and Lenka Horáková, MD, MSc, PhD, DESAIC, for assistance with experiments evaluating apparatus performance under actual mountain snow conditions. This study was supported by the Czech Technical University in Prague Student Grant Competition, project No. SGS26/174/OHK4/3T/17.

References

[1] Grissom CK, Radwin MI, Harmston CH, Hirshberg EL, Crowley TJ. Respiration during snow burial using an artificial air pocket. JAMA. 2000;283(17):2266–71. DOI: 10.1001/jama.283.17.2266.

[2] Strapazzon G, Paal P, Schweizer J, Falk M, Reuter B, Schenk K, et al. Effects of snow properties on humans breathing into an artificial air pocket: an experimental field study. Sci Rep. 2017;7:17675. DOI: 10.1038/s41598-017-17960-4.

[3] Roubík K, Sieger L, Sykora K. Work of breathing into snow in the presence versus absence of an artificial air pocket affects hypoxia and hypercapnia of a victim covered with avalanche snow: a randomized double-blind crossover study. PLoS One. 2015;10(12):e0144332. DOI: 10.1371/journal.pone.0144332.

[4] Walzel S, Rozanek M, Roubik K. Perlite has similar diffusion properties for oxygen and carbon dioxide to snow: implications for avalanche safety equipment testing and breathing studies. Appl Sci (Basel). 2023;13(23):12569. DOI: 10.3390/app132312569.

[5] Cramer JM, Latosuo E, Sullivan P. Gas diffusion in wet avalanche debris pertaining to search and rescue dogs. In: Proceedings of the International Snow Science Workshop 2016; 2016 Oct 2–7; Breckenridge, CO. p. 277–81. Available from: https://arc.lib.montana.edu/snow-science/objects/ISSW16_O12.02.pdf

[6] Eisendle F, Roveri G, Rauch S, Thomassen Ø, Dal Cappello T, Assmus J, et al. Respiratory gas shifts to delay asphyxiation in critical avalanche burial: a randomized clinical trial. JAMA. 2025;334(19):1720–7. DOI: 10.1001/jama.2025.16837.

[7] GE Healthcare Finland Oy. Datex-Ohmeda E-Modules: Technical Reference Manual. 4th ed. Helsinki: GE Healthcare Finland Oy; 2012.

Ladislav Bís, MEng.
Department of Biomedical Technology
Faculty of Biomedical Engineering
Czech Technical University in Prague
nám. Sítná 3105, CZ-272 01 Kladno

E-mail: bisladis@fbmi.cvut.cz
Phone: +420 605 721 634

Lekar a technika – Clinician and Technology 2026, vol. 56, pp.51–66, DOI: 10.14311/CTJ.2026.56.07
ISSN 0301-5491 (Print), ISSN 2336-5552 (Online)