doi:10.14311/ppt.2017.2.124
Plasma Physics and Technology **4**(2):124–128, 2017 © Department of Physics, FEE CTU in Prague, 2017

ANALYSIS OF ARC PROCESSES IN MULTI-CHAMBER ARRESTER FOR LIGHTNING PROTECTION AT HIGH-VOLTAGE OVERHEAD POWER LINES

Iu.V. Murashov[a], V.Ya. Frolov[a,*], D. Uhrlandt[b], S. Gortschakow[b], D.V. Ivanov[a], A.D. Sivaev[c]

[a] *Peter the Great St.Petersburg Polytechnic University, Polytechnicheskaya, 29, 195251, Saint-Petersburg, Russia*
[b] *Leibniz Institute for Plasma Science and Technology, Felix-Hausdorff-Str. 2, 17489 Greifswald, Germany*
[c] *Streamer Electric Company, Nevsky Prospect, 147, 191024, Saint-Petersburg, Russia*
[*] eie@spbstu.ru

Abstract. Nowadays multi-chamber arresters are widely distributed as devices of lightning protection of overhead power lines. A mathematical modelling of processes in the discharge chamber of multi-chamber arrester is necessary to carry out in order to improve its breaking capacity. A three-dimensional mathematical transient model of thermal, gas-dynamic and electromagnetic processes taking place in the discharge chamber of multi-chamber arrester is presented in the article. Basic assumptions, model equations, a computational domain and the boundary conditions are described. Plasma turbulence is taken into account. The results of the calculation i.e. distributions of plasma temperature and overpressure in the discharge chamber at different time points are shown. The analysis of the results was carried out. It is shown that the presence of cavities in the electrodes design promotes electric arc extinction in the discharge chamber of multi-chamber arrester.

Keywords: lightning protection, electric arc extinction, arrester .

1. 1. Introduction

Protection of overhead power lines and equipment of electrical substations from a direct lightning strike requires special lightning protection devices. A new promising method for such protection is the use of multi-chamber surge arresters [1, 2] with electrodes placed into dielectric chamber (see Figure 1).

Recently, a series of theoretical and experimental studies of such arresters was performed. The goal of those investigations was a choice of electrode and discharge chamber materials that provide the best arc extinguishing conditions and a long service life of the device [3]. Also studies of the electrical strength and electrical conductivity of plasma near the chamber outlet during the pulse current through the discharge chamber were made [4]. Based on the results of those studies a non-stationary three-dimensional mathematical model of plasma processes in a discharge chamber of a multi-chamber arrester was created [5–8].

This article is a continuation and development of theoretical investigations that has been carried out in the papers [5–8].

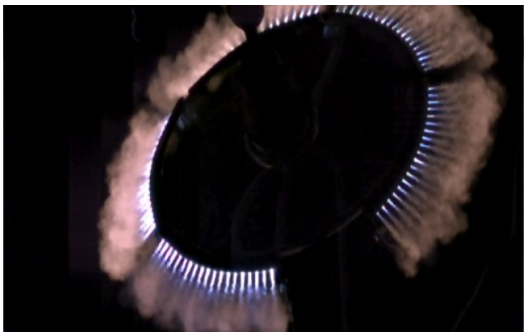

Figure 1. Arc discharge in multi-chamber arrester

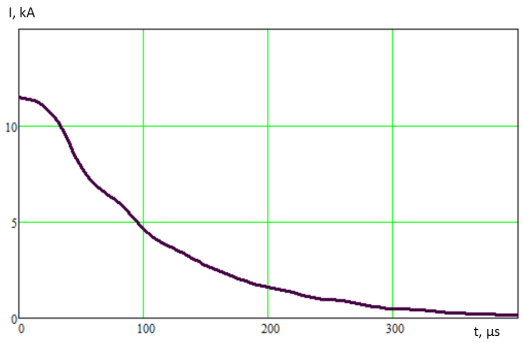

Figure 2. Discharge current dependence on time

2. 2. Mathematical model and initial data

A three-dimensional non-stationary mathematical model has been developed for modeling the processes in the discharge chamber of the multi-chamber arrester. The model includes the energy equation, the motion equation, the continuity equation, the electromagnetic equation on the basis of Maxwell's system. The details of used mathematical model was presented in the paper [8]. The main differences between this model and the model presented in [8] are plasma turbulence and the use of polygonal meshes.

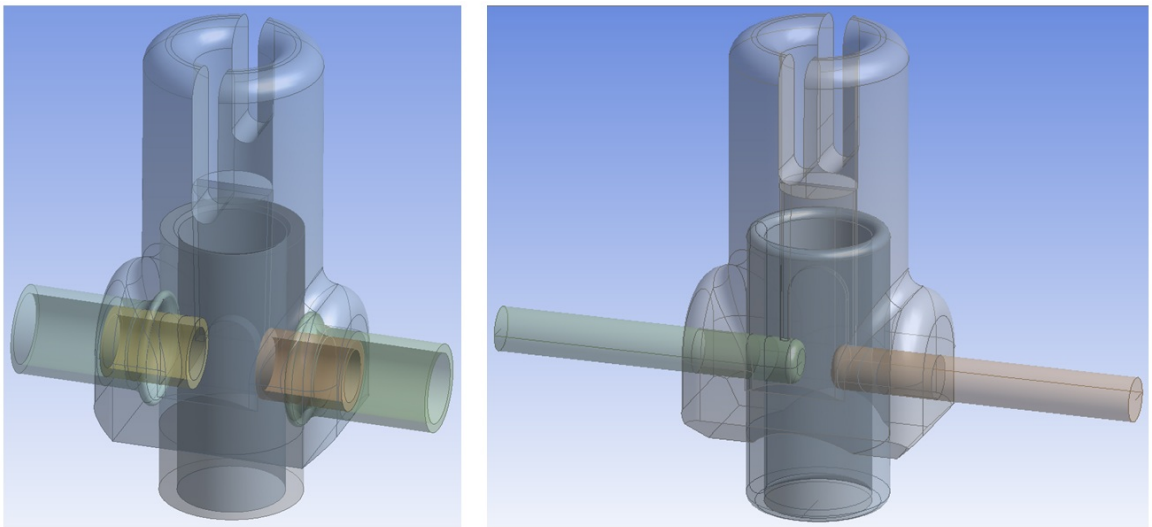

Figure 3. Investigated designs of the discharge chamber

The turbulence of plasma flow was taken into account by the SST-model which is a combination of $k-\epsilon$ and $k-\omega$ turbulence models: $k-\epsilon$ model are used for calculation in the free flow zone while $k-\omega$ model are used in the zones near walls.

The use of polygonal mesh accelerates the convergence of the solution in comparison with the conventional triagonal mesh.

An electrical potential difference is defined on electrodes surfaces as boundary condition for the electromagnetic problem so that a discharge current through the chamber corresponds to the experimentally obtained dependence at each moment of time (see Figure 2).

The properties of gas (plasma) was calculated based on erosion of the electrodes and ablation of material of walls of the discharge chamber [5].

The solution was performed using the software *ANSYS Fluent* that is used by many researchers to investigate different plasma processes [9–11].

Two cases of the discharge chamber design shown in Figure 3 was calculated. The main difference between cases is the design of the electrodes. A design with tube electrodes forming cavities connected to the main volume of the discharge chamber is shown in the left part of Figure 3 . A design with rod electrodes (without cavities) is shown in the right part of Figure 3 .

3. 3. Results

Results of simulation i.e. distributions of plasma temperature at different points of time are shown in Figure 4 and Figure 5 for two cases of the discharge chamber design.

The obtained results show that:

1) In the case of a discharge chamber with tube electrodes the plasma jet reaches the exit of the chamber gap at time point of 10 µs approximately, and the chamber outlet – at time point of 30 µs;

2) In the case of a chamber with rod electrodes the plasma jet reaches the exit of the chamber gap at time point of 5 µs approximately, and the chamber outlet – at time point of 15 µs. It means that motion of plasma to the outlet is approximately twice as high as in the case with tube electrodes;

3) The maximum temperature at the outlet of the discharge chamber is 15–20 thousand K, in the first 100–120 µs the plasma jet increases in size, then its dimensions decrease;

4) The high-pressure zone reaches the outlet of the discharge chamber earlier than the high-temperature zone. It means that a plasma heated to a high temperature moves towards the exit and "pushes" cold gas before itself;

5) The presence of a longitudinal cut in the cylindrical part of the discharge chamber leads to the ejection of a part of plasma in this direction and to a decrease in the velocity and temperature of the plasma jet;

6) Analysis of the simulation results shows that the presence of cavities joined to the main volume of the discharge chamber by small openings leads to the fact that at the initial stage of discharge, when pressure inside the discharge chamber exceeds pressure inside the cavities, plasma begins to spread into these cavities. The pressure inside the cavities is increased as long as it begins to exceed the pressure in the discharge chamber, which is lowered due to propagation of the discharge towards the outlet of the discharge chamber. It occurs in about 140–150 µs after the start of discharge. Thereafter, the gas accumulated in the cavities with lower temperature than the discharge core, begins to move in the opposite direction, i.e. from cavities to the discharge chamber. After 160 µs it leads to cooling of the central part of the discharge, which undoubtedly contributes to the extinction of the electric arc. This conclusion is confirmed by the results of experimental observations.

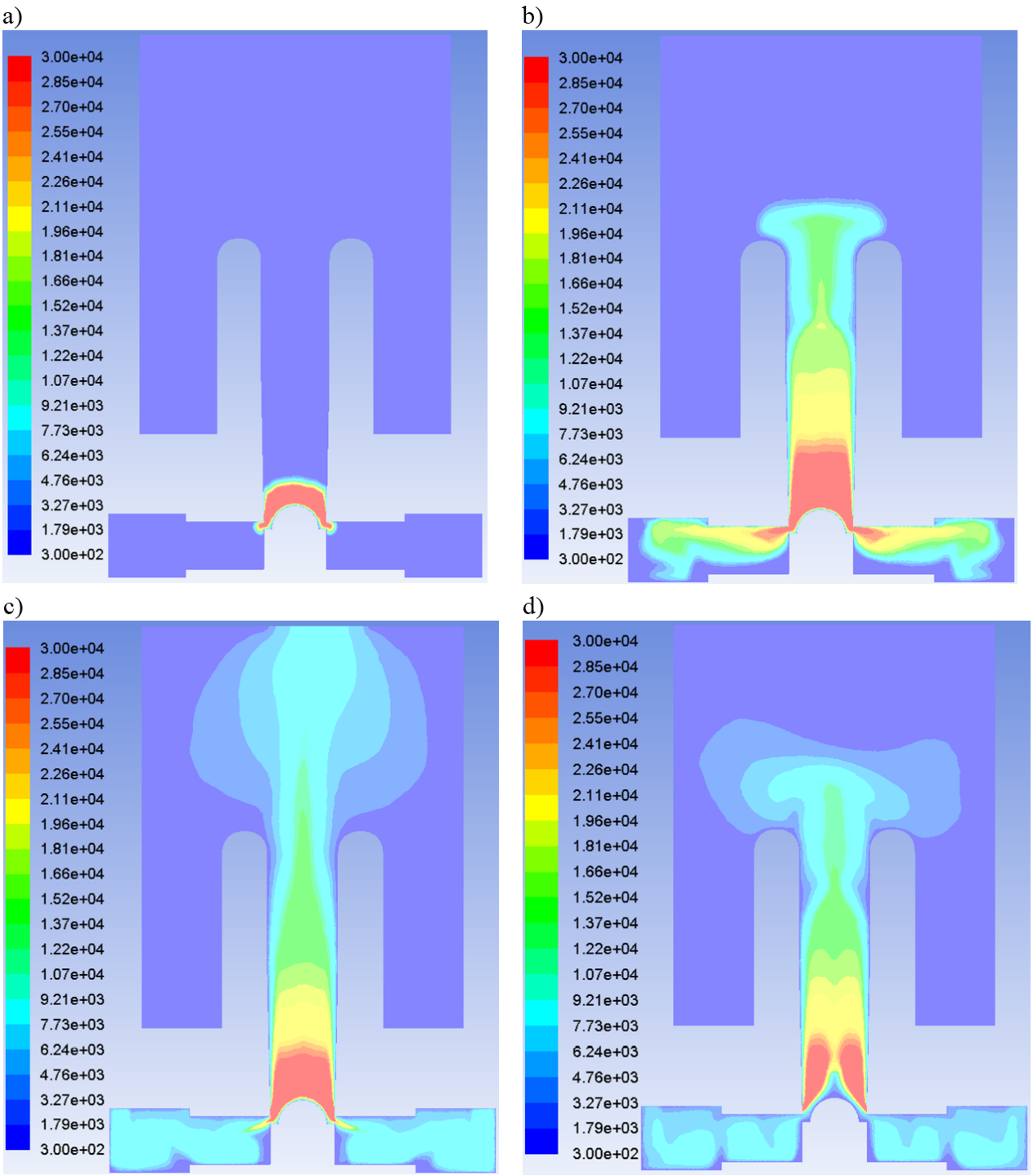

Figure 4. Distributions of temperature (T, K) in the discharge chamber with tube electrodes at different points of time: a – 2 μs; b – 30 μs; c – 140 μs; d – 210 μs

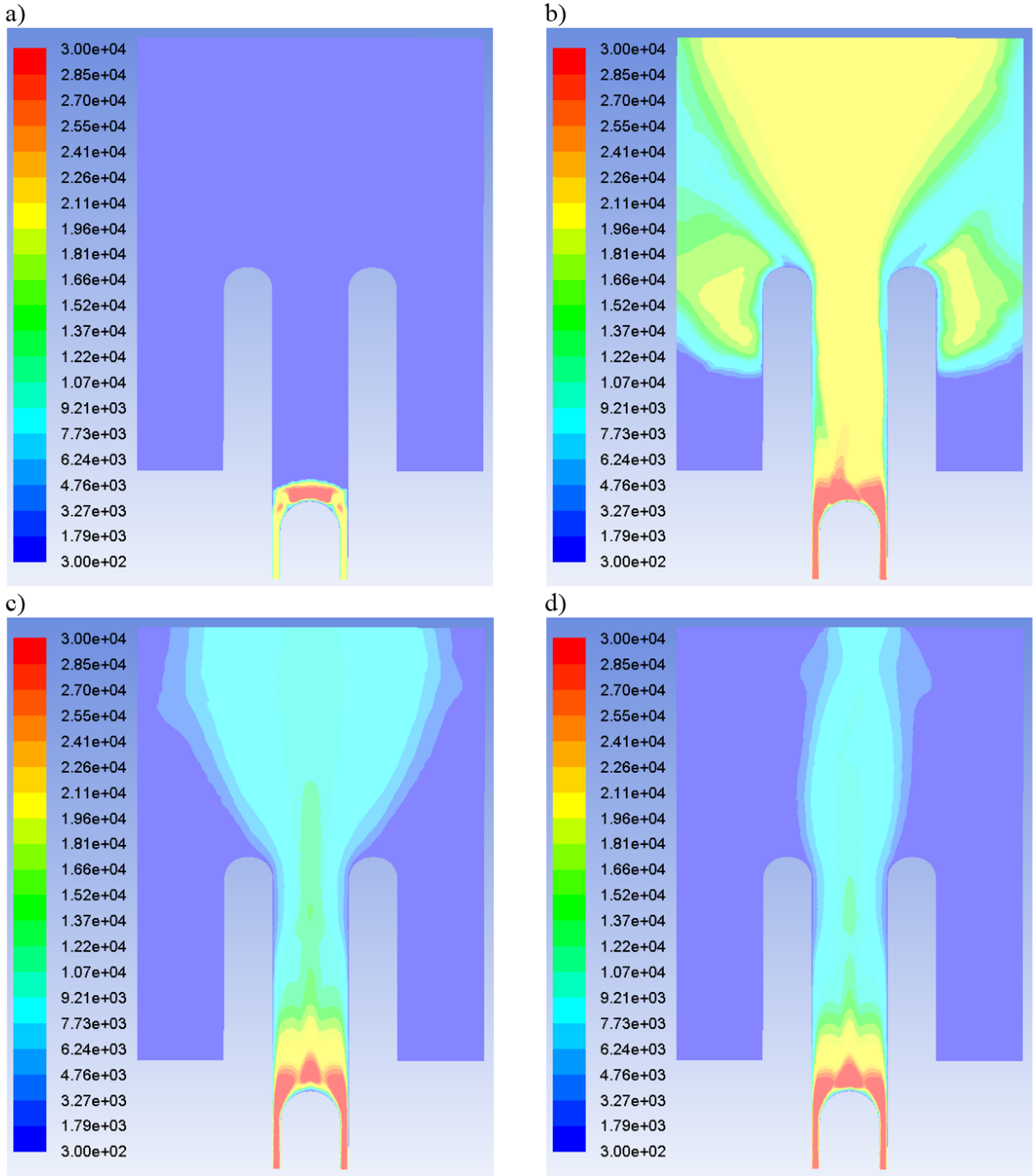

Figure 5. Distributions of temperature (T, K) in the discharge chamber with rod electrodes at different points of time: a – 2 μs; b – 30 μs; c – 140 μs; d – 210 μs

4. 4. Conclusions

The developed mathematical model allows to adequately simulate the processes occurring in the discharge chamber of the multi-chamber arrester and in the surrounding space.

Further studies will be devoted to taking into account in the model the following effects: deformation of the chamber due to high pressure, transport of plasma radiation, deionization processes near the zero of the pulse current.

Acknowledgements

This research has been supported by The Russian Science Foundation.

References

[1] G.V. Podporkin. Development of long flashover and multi-chamber arresters and insulator-arresters for lightning protection of overhead distribution and transmission lines. *Plasma Physics and Technology*, 2(3):241–250, 2015.

[2] Streamer, Electric Company Inc. *Official site*. `http://www.streamer-electric.com/`.

[3] R. Kozakov, A. Khakpour, S. Gorchakov, D. Uhrlandt, D. Ivanov, I. Murashov, G. Podporkin, and V. Frolov. Investigation of a multi-chamber system for lightning protection at overhead power lines. *Plasma Physics and Technology*, 2(2):150–154, 2015.

[4] V.Ye. Pilshchikov, V.Ya. Frolov, and R.A. Belsky. Investigation of the electrical strength and electrical conductivity of plasma near the chamber outlet during the pulse current through the discharge chamber. *Proceedings of V Russian Conference on Lightning Protection*, pages 243–246, 2016.

[5] V.Y. Frolov, D.V. Ivanov, I.V. Murashov, and A.D. Sivaev. Calculation of the composition of plasma of an arc pulsed discharge in a multi-chamber arrester. *Technical Physics Letters*, 41(4):310–313, 2015. `doi:10.1134/S1063785015040069`.

[6] V.Y. Frolov, D.V. Ivanov, I.V. Murashov, and A.N. Chusov. Numerical simulation of plasma processes in a discharge chamber of a multi-chamber surge arrester for lightning protection. *Proceedings of V Russian Conference on Lightning Protection*, pages 334–337, 2016.

[7] A.N. Chusov, G.V. Podporkin, M.E. Pinchuk, D.V. Ivanov, Iu.V. Murashov, and V.Ya. Frolov. Modeling of discharge in multi-chamber systems. *Proceedings of V Russian Conference on Lightning Protection*, pages 351–357, 2016.

[8] V. Frolov, D. Ivanov, I. Murashov, and A. Sivaev. Mathematical simulation of processes in discharge chamber of multi-chamber system for lightning protection at overhead power lines. *Proceedings of the 2016 IEEE North West Russia section young researchers in electrical and electronic engineering conference, ELCONRUSNW 2016*, pages 562–565, 2016. `doi:10.1109/EIConRusNW.2016.7448245`.

[9] V.Ya. Frolov, A.V. Lopota, and D.V. Ivanov. Radio frequency inductively coupled plasma torch for nanomaterials production. *Nauchno-tehnicheskie vedomosti SPbGPU*, 117:146–151, 2011.

[10] V.Y. Frolov, D.V. Ivanov, and M.A. Shibaev. Modeling the plasmachemical synthesis of nanopowdered materials using a combined plasmatron. *Technical Physics Letters*, 40(8):676–679, 2014. `doi:10.1134/S1063785014080185`.

[11] V. Frolov, D. Ivanov, and M. Shibaev. Plasma installation for TiO_2 fine powder production: mathematical simulation. *Plasma Physics and Technology*, 3(2):57–61, 2016.